RG Protector® Series

GENERAC®

Protector®Series
Standby Generators
Liquid-Cooled Gaseous Engine

STANDARD FEATURES

- Evolution™ Controller
- Padlockable Control Panel Cover
- Cellular Connectivity for Mobile Link® and Fleet[1]
- Corrosion Resistant Aluminum Enclosure
- 5 Year/2,000 Hour Limited Warranty
- ±1% Digital Voltage Regulation
- <5% Total Harmonic Distortion Power Quality
- Fuel Efficiency
- Propane or Natural Gas
- EPA Emissions Certified
- CA & MA Emissions Compliant 22 & 27 kW Models Available
- UL 2200 Listed
- SwRI® listed (NFPA 37) 22, 27, 32, & 38 kW models for installation as close as 18 in (457 mm) from structure[2].

1 - Cellular service for the US, Canada, and other supported countries using the Generac Generator Connectivity Accessory, Cellular (GGCAC).

2 - Must be located away from doors, windows, and fresh air intakes and in accordance with applicable codes and regulations.

OPTIONAL FIELD-INSTALLABLE FEATURES

Available as field-installable kits

- Push-Button Emergency Stop
- Cold Weather Operation Heaters

STANDBY POWER RATING

Model RG02224 - 22 kW, 60 Hz Emergency Standby Power Generator
Model RG02724 - 27 kW, 60 Hz Emergency Standby Power Generator
Model RG03224 - 32 kW, 60 Hz Emergency Standby Power Generator
Model RG03824 - 38 kW, 60 Hz Emergency Standby Power Generator
Model RG04524 - 45 kW, 60 Hz Emergency Standby Power Generator
Model RG06024 - 60 kW, 60 Hz Emergency Standby Power Generator

Image of RG02224 shown

EPA Emissions Certified
CA & MA Emissions Compliant 22 & 27 kW Models Available

FEATURES

- **INNOVATIVE DESIGN & PROTOTYPE TESTING** are key components of GENERAC'S success in "IMPROVING POWER BY DESIGN." But it doesn't stop there. Total commitment to component testing, reliability testing, environmental testing, destruction and life testing, plus testing to applicable CSA, NEMA, EGSA, and other standards, allows you to choose GENERAC POWER SYSTEMS with the confidence that these systems will provide superior performance.
- **MOBILE LINK® CONNECTIVITY:** Standard with the Generac Liquid-Cooled RG Protector Series home standby generators, Mobile Link Cellular allows users to monitor the status of their generator from anywhere using a smartphone, tablet, or PC. Easily access real-time operating status, maintenance alerts, and generator readiness. Users can also connect their account to an authorized generator servicer for proactive support and streamlined service. With Mobile Link, users can see their generator is ready before the next power outage.
- **TRUE POWER™ ELECTRICAL TECHNOLOGY:** Superior harmonics and sine wave form produce less than 5% Total Harmonic Distortion for utility quality power. This allows confident operation of sensitive electronic equipment and micro-chip based appliances, such as variable speed HVAC systems.
- **SOLID-STATE, FREQUENCY COMPENSATED VOLTAGE REGULATION.** This state-of-the-art power maximizing regulation system is standard on all Generac models. It provides optimized FAST RESPONSE to changing load conditions and MAXIMUM MOTOR STARTING CAPABILITY by electronically torque-matching the surge loads to the engine. Digital voltage regulation at ±1%.
- **SINGLE SOURCE SERVICE RESPONSE** from Generac's extensive dealer network provides parts and service know-how for the entire unit, from the engine to the smallest electronic component.
- **GENERAC TRANSFER SWITCHES.** Long life and reliability are synonymous with GENERAC POWER SYSTEMS. One reason for this confidence is the GENERAC product line is offered with its own transfer systems and controls for total system compatibility.

GENERAC

GENERATOR SPECIFICATIONS

GENERATOR OUTPUT

PROPANE

Voltage	RG02224		RG02724		RG03224		RG03824		RG04524		RG06024	
	Power (kW)	Current (A)	Power (kW)	Current (A)	Power (kW)	Current (A)	Power (kW)	Current (A)	Power (kW)	Current (A)	Power (kW)	Current (A)
120/240 V 1-Phase	22	92	27	113	32	133	38	158	45	188	60	250
208/120 V 3-Phase	22	76	27	94	32	111	38	132	45	156	60	208
240/120 V 3-Phase	22	66	27	81	32	96	38	114	45	135	60	180
480/277 V 3-Phase	—	—	—	—	32	48	38	57	45	68	60	90

NATURAL GAS

Voltage	RG02224		RG02724		RG03224		RG03824		RG04524		RG06024	
	Power (kW)	Current (A)	Power (kW)	Current (A)	Power (kW)	Current (A)	Power (kW)	Current (A)	Power (kW)	Current (A)	Power (kW)	Current (A)
120/240 V 1-Phase	22	92	25	104	32	133	38	158	45	188	60	250
208/120 V 3-Phase	22	76	25	87	32	111	38	132	45	156	60	208
240/120 V 3-Phase	22	66	25	75	32	96	38	114	45	135	60	180
480/277 V 3-Phase	—	—	—	—	32	48	38	57	45	68	60	90

Emergency Standby Power (ESP) Rating: Standby ratings apply to installations served by a reliable utility source. The ESP rating is applicable to varying loads for the duration of a power outage. The average power output over 24 hours shall not exceed 70% of the ESP rating.

VOLTAGE REGULATION

Type	Electronic
Sensing	1-Phase
Regulation	±1%

ALTERNATOR SYSTEM

		RG02224	RG02724	RG03224	RG03824	RG04524	RG06024
Circuit Breaker (CB) Size (A)	120/240 V 1-Phase	100	125	150	175	200	300
	208/120 V 3-Phase	80	100	125	150	175	250
	240/120 V 3-Phase	80	90	100	125	150	200
	480/277 V 3-Phase	—	—	60	60	80	100
Alternator Type		Synchronous					
Rotor Insulation Class		H		F		H	
Stator Insulation Class		H					
Telephone Interference Factor (TIF)		<50					
Bearings		Sealed Ball					
Coupling		Flexible Disc					
Excitation System		Direct					
Total Harmonic Distortion		<5%					

SURGE CAPACITY

Surge Amps at 0.4 Power Factor	RG02224		RG02724		RG03224		RG03824		RG04524		RG06024	
	15% Voltage Dip (A)	30% Voltage Dip (A)	15% Voltage Dip (A)	30% Voltage Dip (A)	15% Voltage Dip (A)	30% Voltage Dip (A)	15% Voltage Dip (A)	30% Voltage Dip (A)	15% Voltage Dip (A)	30% Voltage Dip (A)	15% Voltage Dip (A)	30% Voltage Dip (A)
120/240 V 1-Phase	55	135	62	170	75	180	75	180	105	240	140	320
208/120 V 3-Phase	40	92	70	120	87	210	87	210	44	130	70	210
240/120 V 3-Phase	35	80	61	103	75	182	75	182	38	115	61	182
480/277 V 3-Phase	—	—	—	—	36	87	36	87	20	60	30	91

GENERAC

GENERATOR SPECIFICATIONS

ENGINE SYSTEM

	RG02224	RG02724	RG03224	RG03824	RG04524	RG06024
Make	Generac					
Model	2.4 L Inline Four-Cylinder, Naturally Aspirated		2.4 L Inline 4-Cylinder, Turbocharged	2.4 L Inline 4-Cylinder, Turbocharged & Aftercooled	2.4 L Inline 4-Cylinder, Naturally Aspirated	2.4 L Inline 4-Cylinder, Turbocharged & Aftercooled
Compression Ratio	9.5:1					
Lifter Type	Hydraulic					
Oil Pump Type	Gear					
Oil Filter Type	Full Flow Spin-on Cartridge					
Crankcase Capacity (qt (L))	4 (3.8)					
Temperature Derate	1.7% per 10 °F above 77 °F (1.5% per 5 °C above 25 °C)					
Altitude Derate	3% per 1,000 ft above 600 ft (1% per 100 m above 183 m)		3% per 1,000 ft. above 3,000 ft. (1% per 100 m above 915 m)		3% per 1,000 ft. above 600 ft. (1% per 100 m above 183 m)	3% per 1,000 ft. above 3,000 ft. (1% per 100 m above 915 m)
Exercise Speed (rpm)	1,500				1,800	
Operating Speed (rpm)	1,800				3,600	
Exhaust Flow at Rated Output (cfm (m^3/min))	165 (4.7)	180 (5.1)	300 (8.5)		420 (11.9)	494 (14)

GOVERNOR

Type	Electronic
Frequency Regulation	Isochronous

COOLING SYSTEM

Coolant	50/50 (50% Ethylene Glycol)
Coolant System Capacity (US gal (L))	2.5 (9.5)
Water Pump Type	Belt Driven
Fan Type	Belt Driven
Fan Quantity	1
Maximum Ambient Air Temperature (°F (°C))	122 (50)

FUEL SYSTEM

Usable Fuels	Liquid Propane (LP) Vapor or Natural Gas (NG)
Fuel Type Configuration	Fuel System & Controller Selection; RG06024 Fuel Type is Model-Specific and Not Changeable
LP Vapor Pressure (in H_2O (kPa))	5-14 (1.24-3.48)
NG Pressure (in H_2O (kPa))	5-14 (1.24-3.48)
Fuel Shutoff Solenoid	Standard

FUEL CONSUMPTION

LIQUID PROPANE

Rated Load	RG02224		RG02724		RG03224		RG03824		RG04524		RG06024	
	(US gph)	(L/h)	(US gph)	(L/h)	(US gph)	(L/h)	(US gph)	(L/h)	(US gph)	(L/h)	(US gph)	(L/h)
No Load @ Exercise Speed	0.5	1.7	0.5	1.7	0.8	3.2	0.9	3.2	0.7	2.6	1.3	5.1
25%	1.1	4.2	1.2	4.5	1.7	6.3	1.7	6.6	2.3	8.6	2.7	10.5
50%	2.1	7.8	2.1	8.1	2.7	10.3	2.9	10.8	4.2	15.7	5.0	19.0
75%	2.8	10.5	3.1	11.1	3.7	13.9	4.0	15.0	5.9	22.4	7.0	26.5
100%	3.4	13.0	3.9	11.8	4.6	17.5	5.2	19.0	8.0	30.1	9.0	33.9

Propane - 91,452 BTU/US gal (25.5 MJ/L); 36 ft^3/US gal (0.27 m^3/L); 2,516 BTU/ft^3 (93.7 MJ/m^3); 4.24 lb/US gal (0.508 kg/L)

NATURAL GAS

Rated Load	RG02224		RG02724		RG03224		RG03824		RG04524		RG06024	
	(CFH)	(m^3/h)	(CFH)	(m^3/h)	(CFH)	(m^3/h)	(CFH)	(m^3/h)	(CFH)	(m^3/h)	(CFH)	(m^3/h)
No Load @ Exercise Speed	42	1.2	42	1.2	79	2.2	83	2.3	65	1.8	123	3.5
25%	100	2.8	108	3.1	144	4.1	162	4.6	210	6.0	267	7.6
50%	190	5.4	197	5.6	226	6.4	255	7.2	380	10.8	483	13.7
75%	255	7.2	287	8.2	298	8.4	345	9.8	545	15.5	672	19.1
100%	316	9.0	359	10.2	375	10.6	437	12.4	730	20.7	862	24.5

Natural Gas - 1,036 BTU/ft^3 (37.3 MJ/m^3)
See Emissions Data Sheets for maximum fuel flow for EPA and SCAQMD permitting purposes.

ELECTRICAL SYSTEM

System Voltage (V)	12
Charge Alternator (A)	30
Battery Charger (A)	2.5
Recommended Battery (not included)	Flooded Lead Acid, Group 26, 525 CCA Minimum

ENCLOSURE

	RG02224	RG02724	RG03224	RG03824	RG04524	RG06024
Sound Level at Exercise Speed (dB(A) @ 23 ft (7 m))	61	61	58	58	61	65
Sound Level at Operating Speed & No Load (dB(A) @23 ft (7 m))	70	70	64	64	73	73
Color	Bisque					

GENERAC®

GENERATOR SPECIFICATIONS

EVOLUTION CONTROLLER FEATURES

Two-Line Plain Text LCD		Simple user interface for ease of operation.
Languages		English, French, Spanish, and Portuguese
Mode Switch:	AUTO	Automatic Start on Utility failure. 7 day exerciser.
	OFF	Stops unit. Power is removed. Control and charger still operate.
	MANUAL	Start with starter control, unit stays on. If utility fails, transfer to load takes place.
Programmable start delay between 10 – 30 seconds		10 sec standard
Engine Start Sequence		Cyclic cranking: 16 sec on, 7 rest (90 sec maximum duration)
Engine Warm-up		5 sec
Engine Cool-down		1 min
Starter Lock-out		Starter cannot re-engage until 5 sec after engine has stopped.
Smart Battery Charger		Standard
Automatic Voltage Regulation with Over and Under Voltage Protection		Standard
Automatic Low Oil Pressure Shutdown		Standard
Overspeed Shutdown		Standard, 72 Hz
High Temperature Shutdown		Standard
Overcrank Protection		Standard
Safety Fused		Standard
Failure to Transfer Protection		Standard
Low Battery Protection		Standard
50 Event Run Log		Standard
Future Set Capable Exerciser		Standard
Incorrect Wiring Protection		Standard
Internal Fault Protection		Standard
Common External Fault Capability		Standard
Governor Failure Protection		Standard

AVAILABLE ACCESSORIES

PRODUCT	PART NUMBER	DESCRIPTION
Control System Kits		
Generac Generator Connectivity Accessory, Cellular (GGCAC)	G0072150	The GGCAC provides a reliable cellular connection for the generator. Monitoring of the generator is possible for the owner using Mobile Link and for the servicer using Fleet. The GGCAC can be installed on any generator that already has the Wi-Fi device to upgrade to cellular connectivity. NEW RG02224, RG02724, RG03224, RG03824, RG04524, and RG06024 generators include the GGCAC as standard.
Enclosure Mounted Emergency Stop Kit	G0065100	Emergency Stop consists of a red push button switch. It mounts to the exterior of the generator enclosure replacing the Generator Emergency Shutdown rocker switch in the same location.
Generac Load Manager, 50 A	G0070001	50 A Load Manager helps optimize the performance of the standby generator by managing large electrical loads upon startup and sheds them to aid in recovery when overloaded.
Generac Load Manager, 100 A	G0070061	100 A Load Manager helps optimize the performance of the standby generator by managing large electrical loads upon startup and sheds them to aid in recovery when overloaded.
Generac LTE Propane Tank Fuel Level Monitor	G0070090	The Propane Tank Fuel Level Monitor connects to 4G LTE cellular service to measure and report amount of LP fuel remaining in the tank. The app alerts the user of both remaining LP fuel and usage reports, offering the ultimate peace of mind.
Operating Environment Kits		
Battery Heater Kit	G0056301	Recommended for operating environments where the temperature drops below 32 °F (0 °C). The heater is externally powered by 120 VAC, 60 Hz. Applies to RG02224, RG02724, RG03224, RG03824, RG04524, and RG06024.
Engine Block Heater Kit	G0056160	Recommended for operating environments where the temperature drops below 0 °F (-18 °C). The heater is externally powered by 120 VAC, 60 Hz. Applies to RG02224, RG02724, RG03224, RG03824, RG04524, and RG06024.
Installation Kits		
Base Plug Kit	G0056510	Base plugs to fit in the lifting holes of the baseframe to keep debris out.
Maintenance Kits		
2.4 L NA Gaseous Engine Regular Maintenance Kit	G0056560	Regular maintenance kit includes oil filter, oil funnel, air filter, and spark plugs. Applies toRG02224 and RG02724 generator models.
2.4 L Turbo/TAC Gaseous Engine Regular Maintenance Kit	G0059840	Regular maintenance kit includes oil filter, oil funnel, air filter, and spark plugs. Applies to RG03224 and RG03824 generator models.
2.4 L NA High Speed Gaseous Engine Regular Maintenance Kit	G0061720	Regular maintenance kit includes oil filter, oil funnel, air filter, and spark plugs. Applies to RG04524 generator models.
2.4 L TAC High Speed Gaseous Engine Regular Maintenance Kit	G0061710	Regular maintenance kit includes oil filter, oil funnel, air filter, and spark plugs. Applies to RG06024 generator models.
Bisque Paint Kit	G0057030	If the generator enclosure is scratched or damaged, it is important to touch-up the paint to protect from future corrosion. The paint kit includes the necessary paint to correctly maintain or touch-up a generator enclosure.

GENERAC®

INSTALLATION DRAWING

22 & 27 KW

Drawing #0K8624-F (1 of 2)

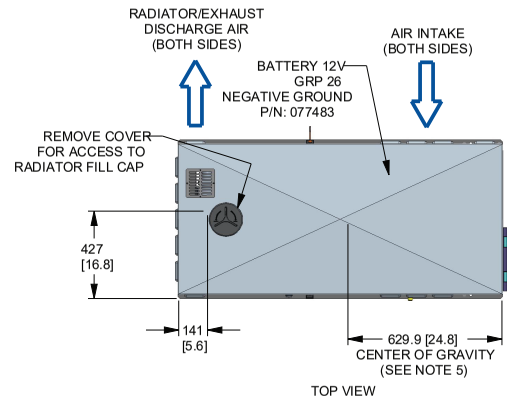

TOP VIEW

SERVICE ITEM	2.4L
OIL FILL CAP	EITHER SIDE
OIL DIP STICK	RIGHT SIDE
OIL FILTER	RIGHT SIDE
OIL DRAIN HOSE	LEFT SIDE
RADIATOR DRAIN	LEFT SIDE
COOLANT RECOVERY BOTTLE	LEFT SIDE
RADIATOR FILL CAP	ROOF TOP
AIR CLEANER ELEMENT	LEFT SIDE
SPARK PLUGS	LEFT SIDE
MUFFLER	SEE NOTE 11
DRIVE BELT	EITHER SIDE
FAN BELT	SEE NOTE 11
BATTERY	LEFT SIDE

REFERENCE OWNERS MANUAL
FOR PERIODIC REPLACEMENT
PART LISTINGS.

NOTES:

1. MINIMUM RECOMMENDED CONCRETE PAD SIZE IS 6" OFFSET OF OVERALL LENGTH AND WIDTH OF GENERATOR. {1082.1 (42.6") WIDE X 1884.7 (74.2") LONG}. REFERENCE INSTALLATION GUIDE SUPPLIED WITH THE UNIT FOR CONCRETE PAD GUIDELINES. REFERENCE MANUFACTURER'S SPECIFICATIONS IF USING ENGINEERED, PREFABRICATED SLABS.
2. ALLOW SUFFICIENT ROOM ON ALL SIDES OF THE GENERATOR FOR MAINTENANCE AND SERVICING. THIS UNIT MUST BE INSTALLED IN ACCORDANCE WITH CURRENT APPLICABLE NFPA 37 AND NFPA 70 STANDARDS AS WELL AS ANY OTHER FEDERAL, STATE, AND LOCAL CODES.
3. CONTROL PANEL / CIRCUIT BREAKER INFORMATION:
   - SEE SPECIFICATION SHEET OR OWNERS MANUAL
   - ACCESSIBLE THROUGH CUSTOMER ACCESS ASSEMBLY DOOR ON REAR OF GENERATOR.
4. REMOVE THE REAR ENCLOSURE COVER PANEL TO ACCESS THE STUB-UP AREAS AS FOLLOWS:
   - HIGH VOLTAGE CONNECTION INCLUDING AC LOAD LEAD CONDUIT CONNECTION NEUTRAL CONNECTION, BATTERY CHARGER 120 VOLT AC (0.5 AMP MAX) CONNECTION.
   - LOW VOLTAGE CONNECTION INCLUDING TRANSFER SWITCH CONTROL WIRES.
5. CENTER OF GRAVITY AND WEIGHT MAY CHANGE DUE TO UNIT OPTIONS.
6. BOTTOM OF GENERATOR SET MUST BE ENCLOSED TO PREVENT PEST INTRUSION AND RECIRCULATION OF DISCHARGE AIR AND/OR IMPROPER COOLING AIR FLOW.
7. REFERENCE OWNERS MANUAL FOR LIFTING WARNINGS.
8. RECOMMENDED MOUNTING BOLTS OR STUDS TO MOUNTING SURFACE SHALL BE 1/2" DIAMETER (USE STANDARD SAE TORQUE SPECS)
9. MUST ALLOW FREE FLOW OF INTAKE AIR, DISCHARGE AIR AND EXHAUST. SEE SPEC SHEET FOR MINIMUM AIR FLOW AND MAXIMUM RESTRICTION REQUIREMENTS.
10. GENERATOR MUST BE INSTALLED SUCH THAT FRESH COOLING AIR IS AVAILABLE AND THAT DISCHARGE AIR FROM RADIATOR IS NOT RECIRCULATED.
11. EXHAUST MUFFLER AND FAN BELT ENCLOSED WITHIN GENERATOR ENCLOSURE, REMOVE FRONT PANEL TO ACCESS.

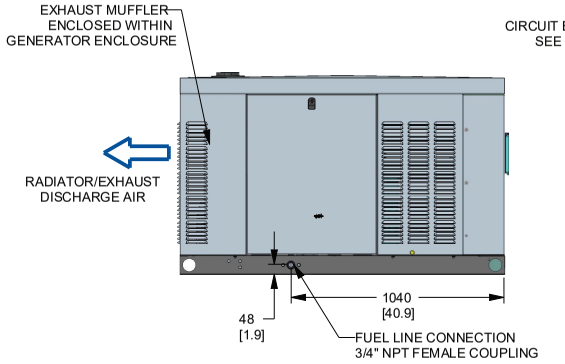

LEFT SIDE VIEW

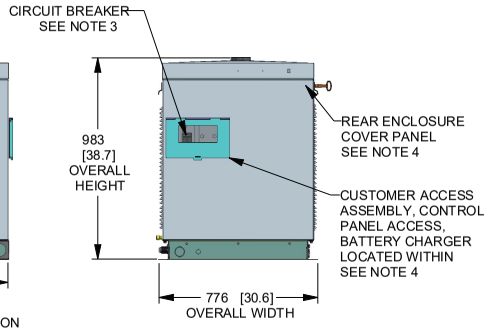

REAR VIEW

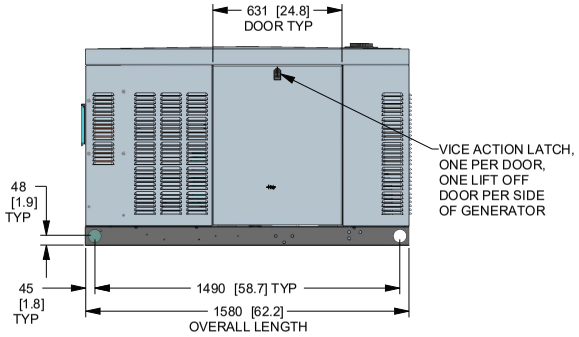

RIGHT SIDE VIEW

WEIGHT DATA				
ENGINE/KW KVA	ENCLOSURE MATERIAL	WEIGHT GENSET ONLY KG [LBS]	WEIGHT SHIPPING SKID KG [LBS]	SHIPPING WEIGHT KG [LBS]
2.4L 22KW (60HZ) SINGLE PHASE 17.4KVA (50HZ) THREE PHASE 22KVA (50HZ)	AL	410.5 [905]	30 [66]	440 [971]
2.4L 27KW (60HZ) SINGLE PHASE 21.6KVA (50HZ) THREE PHASE 27KVA (50HZ)	AL	426 [940]	30 [66]	456 [1006]

22 & 27 KW

Drawing #0K8624-F (2 of 2)

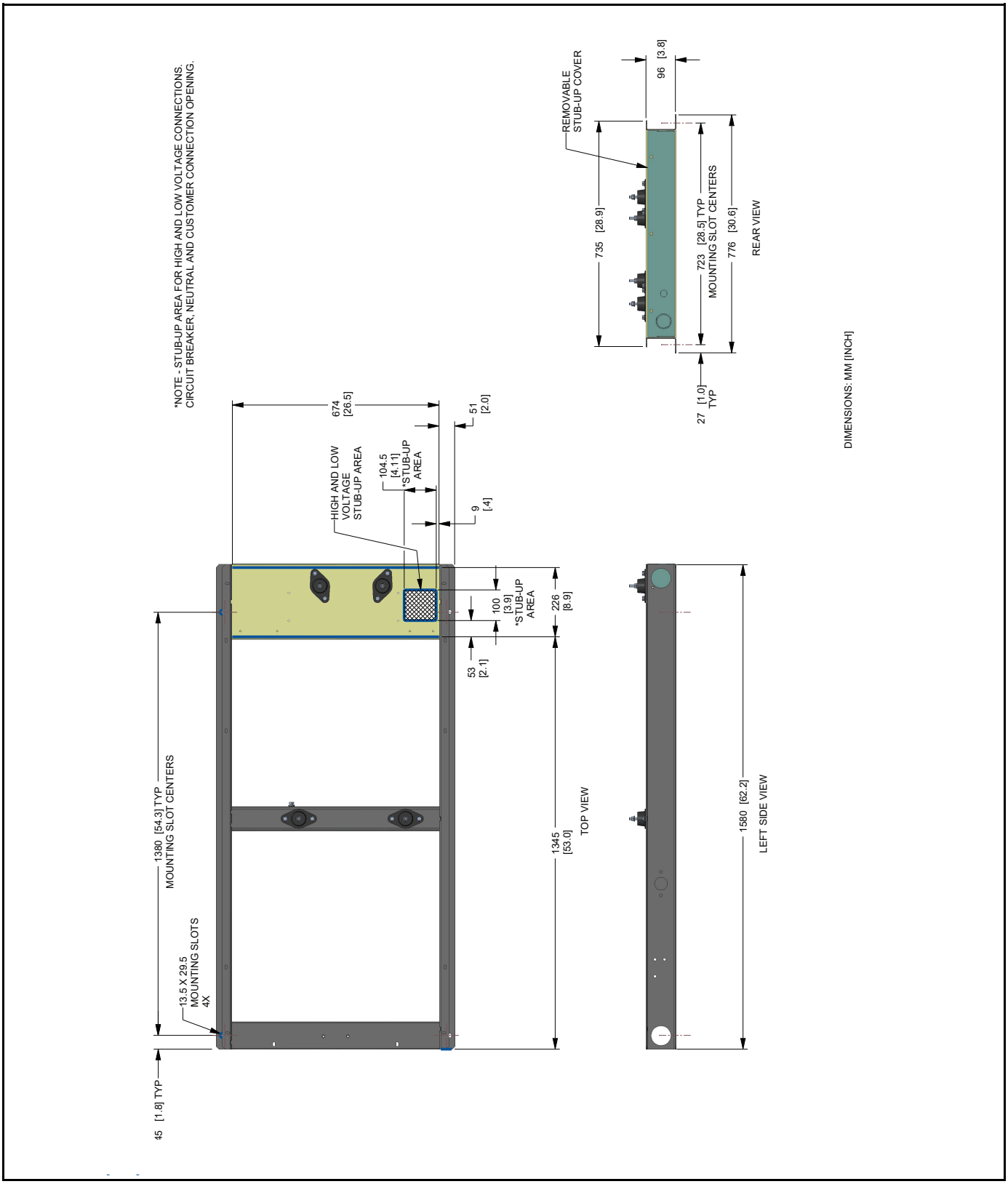

GENERAC®

INSTALLATION DRAWING

32 & 38 KW

Drawing #0K9268-G (1 of 2)

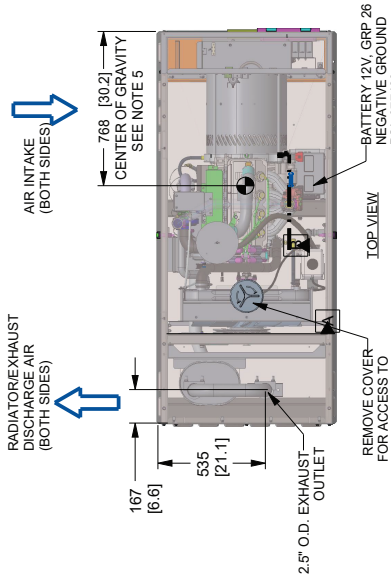

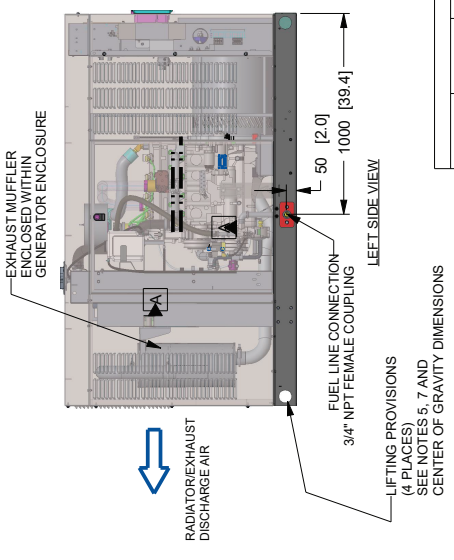

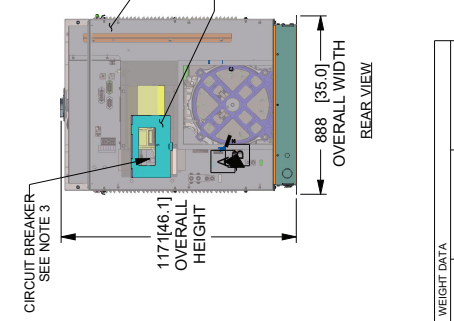

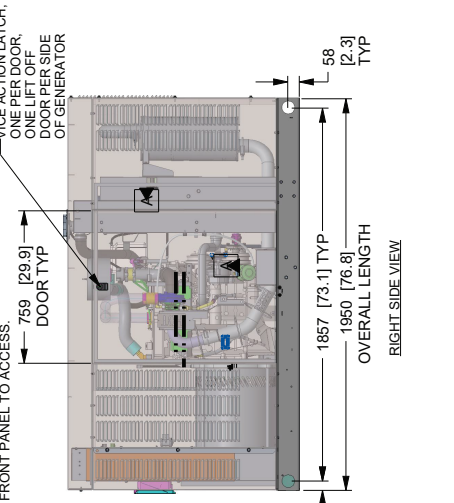

SERVICE ITEM	2.4L
OIL FILL CAP	EITHER SIDE
OIL DIP STICK	RIGHT SIDE
OIL FILTER	RIGHT SIDE
OIL DRAIN HOSE	RIGHT SIDE
RADIATOR DRAIN HOSE	LEFT SIDE
COOLANT RECOVERY BOTTLE	LEFT SIDE
RADIATOR FILL CAP ACCESS	ROOF TOP
AIR CLEANER ELEMENT	RIGHT SIDE
SPARK PLUGS	LEFT SIDE
MUFFLER	SEE NOTE 11
DRIVE BELT	EITHER SIDE
FAN BELT	SEE NOTE 11
BATTERY	LEFT SIDE

REFERENCE OWNERS MANUAL FOR PERIODIC REPLACEMENT PART LISTINGS.

NOTES:

1. MINIMUM RECOMMENDED CONCRETE PAD SIZE IS 6" OFFSET OF OVERALL LENGTH AND WIDTH OF GENERATOR. (1193.8 (47") WIDE X 2255.5 (88.8") LONG). REFERENCE INSTALLATION GUIDE SUPPLIED WITH THE UNIT FOR CONCRETE PAD GUIDELINES. REFERENCE MANUFACTURER'S SPECIFICATIONS IF USING ENGINEERED, PREFABRICATED SLABS.
2. ALLOW SUFFICIENT ROOM ON ALL SIDES OF THE GENERATOR FOR MAINTENANCE AND SERVICING. THIS UNIT MUST BE INSTALLED IN ACCORDANCE WITH CURRENT APPLICABLE NFPA 37 AND NFPA 70 STANDARDS AS WELL AS ANY OTHER FEDERAL, STATE, AND LOCAL CODES.
3. CONTROL PANEL / CIRCUIT BREAKER INFORMATION:
   - SEE SPECIFICATION SHEET OR OWNERS MANUAL
   - ACCESSIBLE THROUGH CUSTOMER ACCESS ASSEMBLY DOOR ON REAR OF GENERATOR.
4. REMOVE THE REAR ENCLOSURE COVER PANEL TO ACCESS THE STUB-UP AREAS AS FOLLOWS:
   - HIGH VOLTAGE CONNECTION INCLUDING AC LOAD LEAD CONDUIT CONNECTION, NEUTRAL CONNECTION, AND BATTERY CHARGER 120 VOLT AC (0.5 AMP MAX) CONNECTION.
   - LOW VOLTAGE CONNECTION INCLUDING TRANSFER SWITCH CONTROL WIRES.
5. CENTER OF GRAVITY AND WEIGHT MAY CHANGE DUE TO UNIT OPTIONS.
6. BOTTOM OF GENERATOR SET MUST BE ENCLOSED TO PREVENT PEST INTRUSION AND RECIRCULATION OF DISCHARGE AIR AND/OR IMPROPER COOLING AIR FLOW.
7. REFERENCE OWNERS MANUAL FOR LIFTING WARNINGS.
8. RECOMMENDED MOUNTING BOLTS OR STUDS TO MOUNTING SURFACE SHALL BE 1/2" DIAMETER (USE STANDARD SAE TORQUE SPECS)
9. MUST ALLOW FREE FLOW OF INTAKE AIR, DISCHARGE AIR AND EXHAUST. SEE SPEC SHEET FOR MINIMUM AIR FLOW AND MAXIMUM RESTRICTION REQUIREMENTS.
10. GENERATOR MUST BE INSTALLED SUCH THAT FRESH COOLING AIR IS AVAILABLE AND THAT DISCHARGE AIR FROM RADIATOR IS NOT RECIRCULATED.
11. EXHAUST MUFFLER AND FAN BELT ARE ENCLOSED WITHIN GENERATOR ENCLOSURE, REMOVE FRONT PANEL TO ACCESS.

WEIGHT DATA

ENGINE/KW	ENCLOSURE MATERIAL	WEIGHT GENSET ONLY KG [LBS]	WEIGHT SHIPPING SKID KG [LBS]	SHIPPING WEIGHT KG [LBS]
2.4L 32KW	AL	556 [1225]	44 [98]	600 [1323]
2.4L 38KW	AL	560 [1235]	44 [98]	605 [1333]

DIMENSIONS: MM [INCH]

32 & 38 KW

Drawing #0K9268-G (2 of 2)

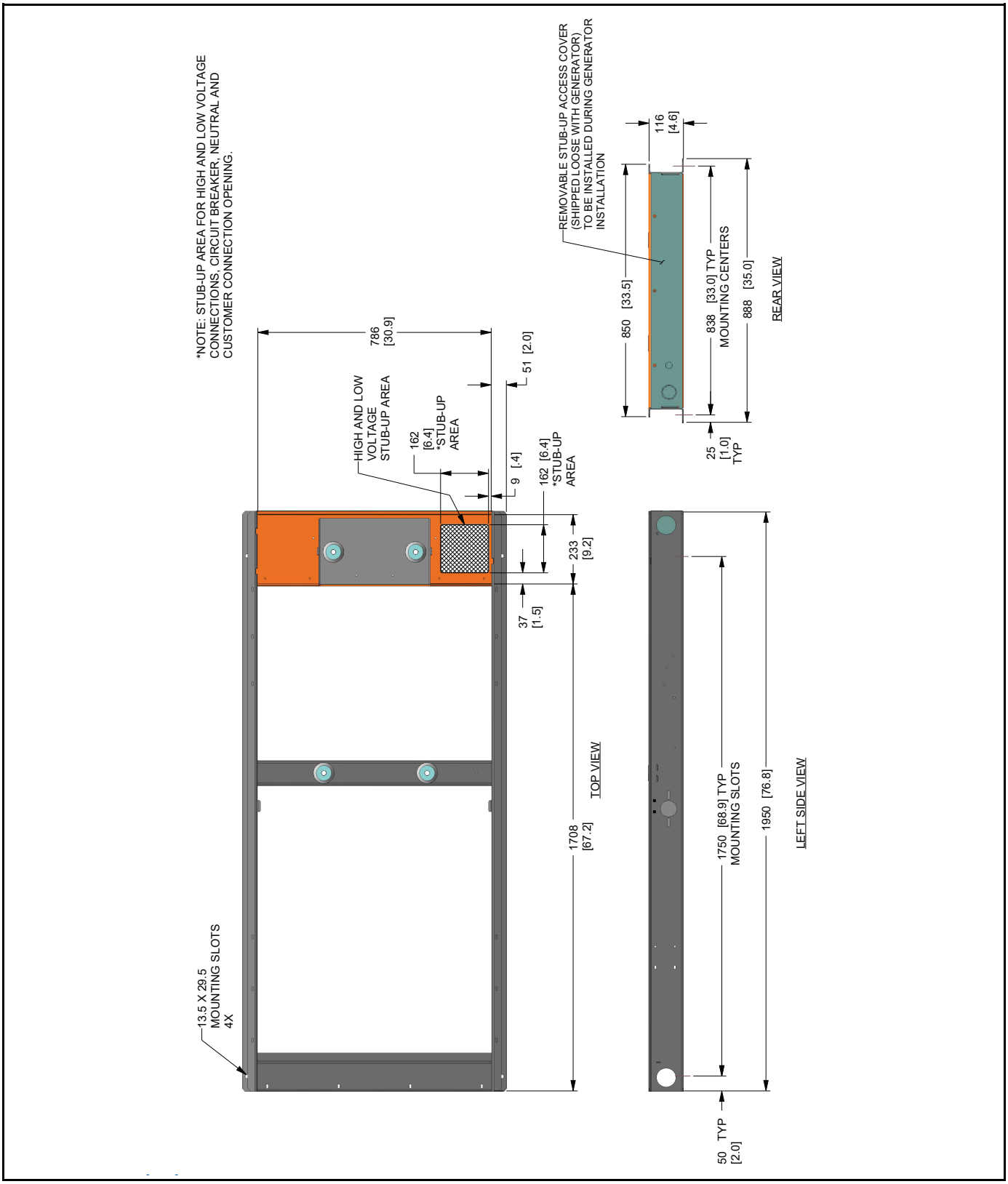

INSTALLATION DRAWING

GENERAC®

45 KW

Drawing #0K8636-E (1 of 2)

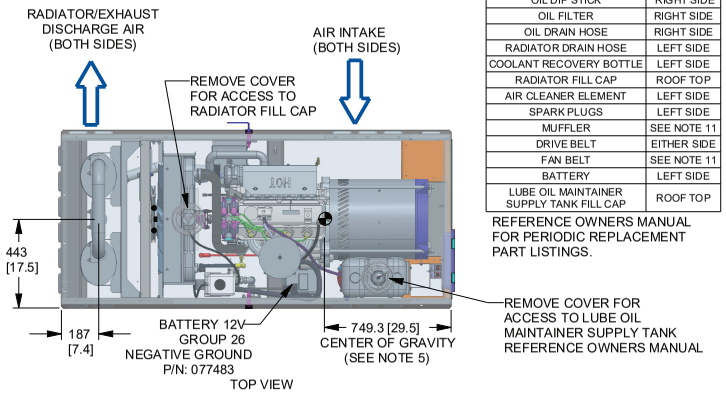

SERVICE ITEM	2.4L
OIL FILL CAP	EITHER SIDE
OIL DIP STICK	RIGHT SIDE
OIL FILTER	RIGHT SIDE
OIL DRAIN HOSE	RIGHT SIDE
RADIATOR DRAIN HOSE	LEFT SIDE
COOLANT RECOVERY BOTTLE	LEFT SIDE
RADIATOR FILL CAP	ROOF TOP
AIR CLEANER ELEMENT	LEFT SIDE
SPARK PLUGS	LEFT SIDE
MUFFLER	SEE NOTE 11
DRIVE BELT	EITHER SIDE
FAN BELT	SEE NOTE 11
BATTERY	LEFT SIDE
LUBE OIL MAINTAINER SUPPLY TANK FILL CAP	ROOF TOP

REFERENCE OWNERS MANUAL FOR PERIODIC REPLACEMENT PART LISTINGS.

NOTES:

1. MINIMUM RECOMMENDED CONCRETE PAD SIZE IS 6" OFFSET OF OVERALL LENGTH AND WIDTH OF GENERATOR. {1193.8 (47") WIDE X 2255.5 (88.8") LONG}. REFERENCE INSTALLATION GUIDE SUPPLIED WITH THE UNIT FOR CONCRETE PAD GUIDELINES. REFERENCE MANUFACTURER'S SPECIFICATIONS IF USING ENGINEERED, PREFABRICATED SLABS.
2. ALLOW SUFFICIENT ROOM ON ALL SIDES OF THE GENERATOR FOR MAINTENANCE AND SERVICING. THIS UNIT MUST BE INSTALLED IN ACCORDANCE WITH CURRENT APPLICABLE NFPA 37 AND NFPA 70 STANDARDS AS WELL AS ANY OTHER FEDERAL, STATE, AND LOCAL CODES.
3. CONTROL PANEL / CIRCUIT BREAKER INFORMATION:
   - SEE SPECIFICATION SHEET OR OWNERS MANUAL
   - ACCESSIBLE THROUGH CUSTOMER ACCESS ASSEMBLY DOOR ON REAR OF GENERATOR.
4. REMOVE THE REAR ENCLOSURE COVER PANEL TO ACCESS THE STUB-UP AREAS AS FOLLOWS:
   - HIGH VOLTAGE CONNECTION INCLUDING AC LOAD LEAD CONDUIT CONNECTION NEUTRAL CONNECTION, BATTERY CHARGER 120 VOLT AC (0.5 AMP MAX) CONNECTION.
   - LOW VOLTAGE CONNECTION INCLUDING TRANSFER SWITCH CONTROL WIRES.
5. CENTER OF GRAVITY AND WEIGHT MAY CHANGE DUE TO UNIT OPTIONS.
6. BOTTOM OF GENERATOR SET MUST BE ENCLOSED TO PREVENT PEST INTRUSION AND RECIRCULATION OF DISCHARGE AIR AND/OR IMPROPER COOLING AIR FLOW.
7. REFERENCE OWNERS MANUAL FOR LIFTING WARNINGS.
8. RECOMMENDED MOUNTING BOLTS OR STUDS TO MOUNTING SURFACE SHALL BE 1/2" DIAMETER (USE STANDARD SAE TORQUE SPECS)
9. MUST ALLOW FREE FLOW OF INTAKE AIR, DISCHARGE AIR AND EXHAUST. SEE SPEC SHEET FOR MINIMUM AIR FLOW AND MAXIMUM RESTRICTION REQUIREMENTS.
10. GENERATOR MUST BE INSTALLED SUCH THAT FRESH COOLING AIR IS AVAILABLE AND THAT DISCHARGE AIR FROM RADIATOR IS NOT RECIRCULATED.
11. EXHAUST MUFFLER AND FAN BELT ENCLOSED WITHIN GENERATOR ENCLOSURE, REMOVE FRONT PANEL TO ACCESS.

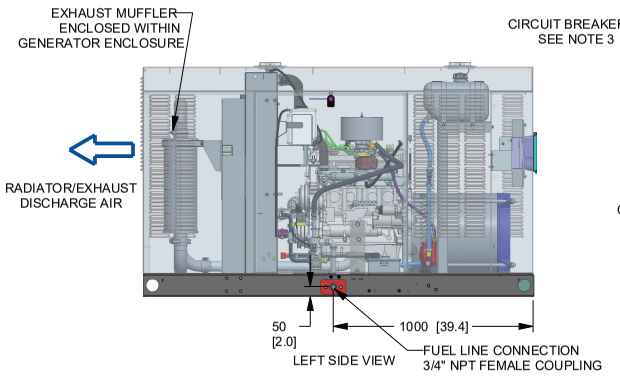

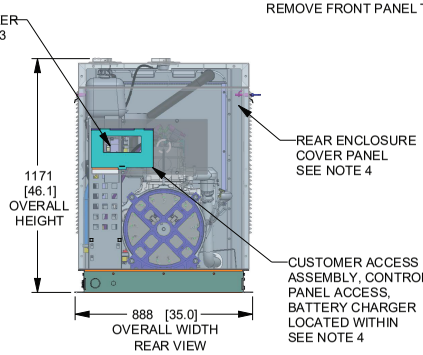

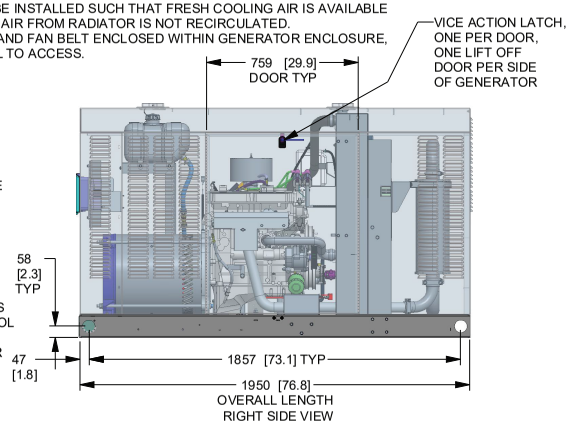

WEIGHT DATA				
ENGINE/KW	ENCLOSURE MATERIAL	WEIGHT GENSET ONLY KG [LBS]	WEIGHT SHIPPING SKID KG [LBS]	SHIPPING WEIGHT KG [LBS]
2.4L 36KW	ST	569 [1255]	44 [98]	613 [1353]
2.4L 36KW	AL	545 [1202]	44 [98]	590 [1300]
2.4L 45KW	ST	596 [1313]	44 [98]	640 [1411]
2.4L 45KW	AL	572 [1260]	44 [98]	616 [1358]

DIMENSIONS: MM [INCH]

45 KW

Drawing #0K8636-E (2 of 2)

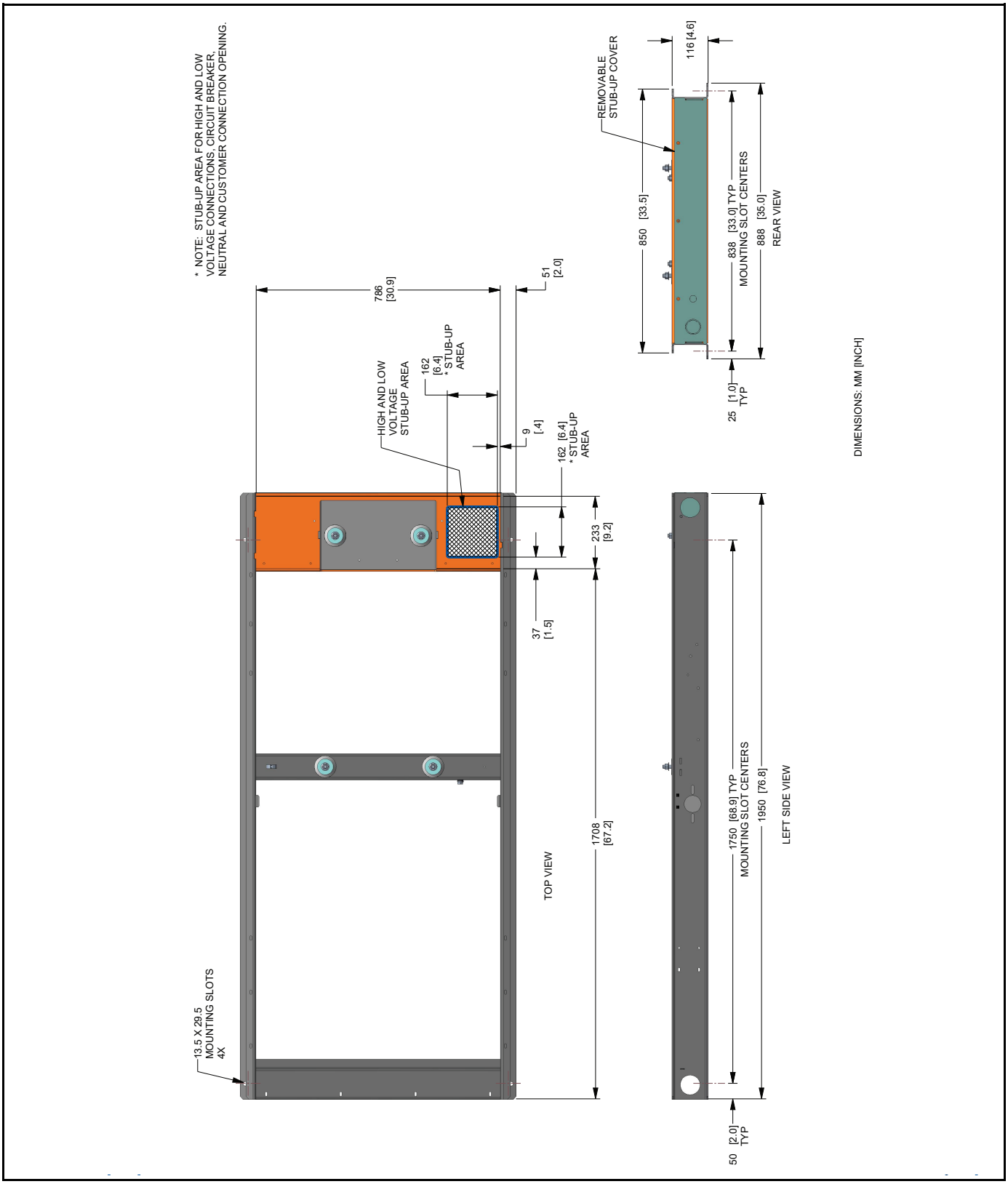

GENERAC®

INSTALLATION DRAWING

60 KW

Drawing #0L2090-E (1 of 2)

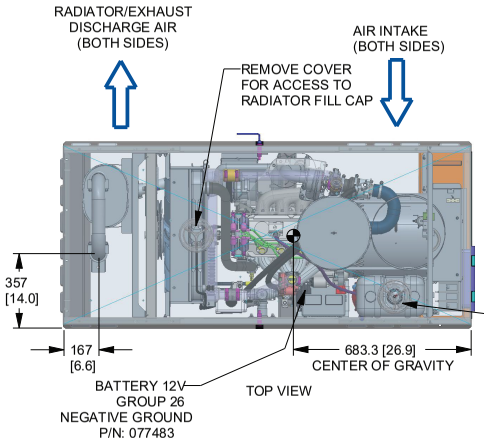

SERVICE ITEM	2.4L
OIL FILL CAP	EITHER SIDE
OIL DIP STICK	RIGHT SIDE
OIL FILTER	LEFT SIDE
OIL DRAIN HOSE	RIGHT SIDE
RADIATOR DRAIN HOSE	LEFT SIDE
COOLANT RECOVERY BOTTLE	LEFT SIDE
RADIATOR FILL CAP	ROOF TOP
AIR CLEANER ELEMENT	LEFT SIDE
SPARK PLUGS	LEFT SIDE
MUFFLER	SEE NOTE 11
DRIVE BELT	EITHER SIDE
FAN BELT	SEE NOTE 11
BATTERY	LEFT SIDE
LUBE OIL MAINTAINER SUPPLY TANK FILL CAP	ROOF TOP

REFERENCE OWNERS MANUAL FOR PERIODIC REPLACEMENT PART LISTINGS.

NOTES:

1. MINIMUM RECOMMENDED CONCRETE PAD SIZE IS 6" OFFSET OF OVERALL LENGTH AND WIDTH OF GENERATOR. {1193.8 (47") WIDE X 2255.5 (88.8") LONG}. REFERENCE INSTALLATION GUIDE SUPPLIED WITH THE UNIT FOR CONCRETE PAD GUIDELINES. REFERENCE MANUFACTURER'S SPECIFICATIONS IF USING ENGINEERED, PREFABRICATED SLABS.
2. ALLOW SUFFICIENT ROOM ON ALL SIDES OF THE GENERATOR FOR MAINTENANCE AND SERVICING. THIS UNIT MUST BE INSTALLED IN ACCORDANCE WITH CURRENT APPLICABLE NFPA 37 AND NFPA 70 STANDARDS AS WELL AS ANY OTHER FEDERAL, STATE, AND LOCAL CODES.
3. CONTROL PANEL / CIRCUIT BREAKER INFORMATION:
   - SEE SPECIFICATION SHEET OR OWNERS MANUAL
   - ACCESSIBLE THROUGH CUSTOMER ACCESS ASSEMBLY DOOR ON REAR OF GENERATOR.
4. REMOVE THE REAR ENCLOSURE COVER PANEL TO ACCESS THE STUB-UP AREAS AS FOLLOWS:
   - HIGH VOLTAGE CONNECTION INCLUDING AC LOAD LEAD CONDUIT CONNECTION NEUTRAL CONNECTION, BATTERY CHARGER 120 VOLT AC (0.5 AMP MAX) CONNECTION.
   - LOW VOLTAGE CONNECTION INCLUDING TRANSFER SWITCH CONTROL WIRES.
5. CENTER OF GRAVITY AND WEIGHT MAY CHANGE DUE TO UNIT OPTIONS.
6. BOTTOM OF GENERATOR SET MUST BE ENCLOSED TO PREVENT PEST INTRUSION AND RECIRCULATION OF DISCHARGE AIR AND/OR IMPROPER COOLING AIR FLOW.
7. REFERENCE OWNERS MANUAL FOR LIFTING WARNINGS.
8. RECOMMENDED MOUNTING BOLTS OR STUDS TO MOUNTING SURFACE SHALL BE 1/2" DIAMETER (USE STANDARD SAE TORQUE SPECS)
9. MUST ALLOW FREE FLOW OF INTAKE AIR, DISCHARGE AIR AND EXHAUST. SEE SPEC SHEET FOR MINIMUM AIR FLOW AND MAXIMUM RESTRICTION REQUIREMENTS.
10. GENERATOR MUST BE INSTALLED SUCH THAT FRESH COOLING AIR IS AVAILABLE AND THAT DISCHARGE AIR FROM RADIATOR IS NOT RECIRCULATED.
11. EXHAUST MUFFLER AND FAN BELT ENCLOSED WITHIN GENERATOR ENCLOSURE, REMOVE FRONT PANEL TO ACCESS.

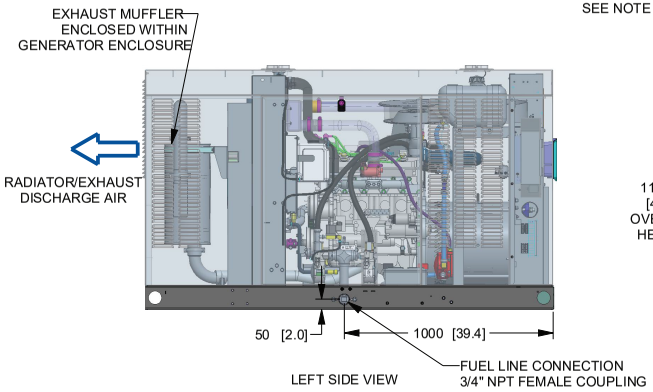

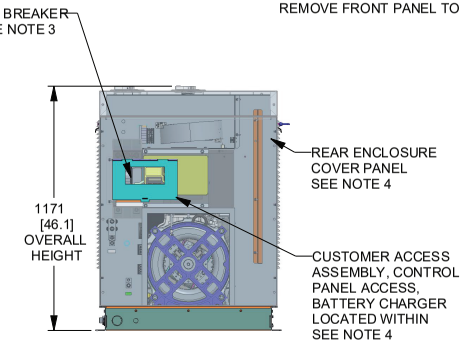

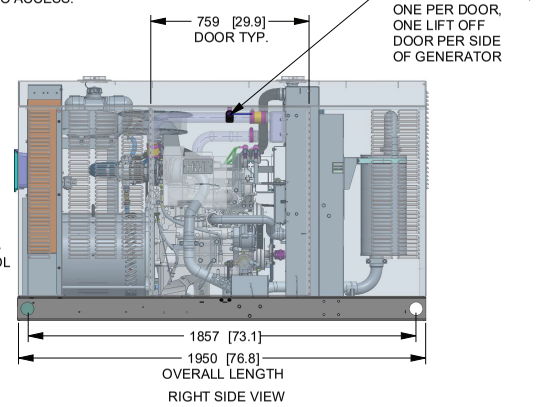

WEIGHT DATA				
ENGINE/KW	ENCLOSURE MATERIAL	WEIGHT GENSET ONLY KG [LBS]	WEIGHT SHIPPING SKID KG [LBS]	SHIPPING WEIGHT KG [LBS]
2.4L 60KW	ST	582 [1283]	44 [98]	626 [1381]
2.4L 60KW	AL	558 [1230]	44 [98]	602 [1328]

DIMENSIONS: MM [INCH]

GENERAC

INSTALLATION DRAWING

60 KW

Drawing #0L2090-E (2 of 2)

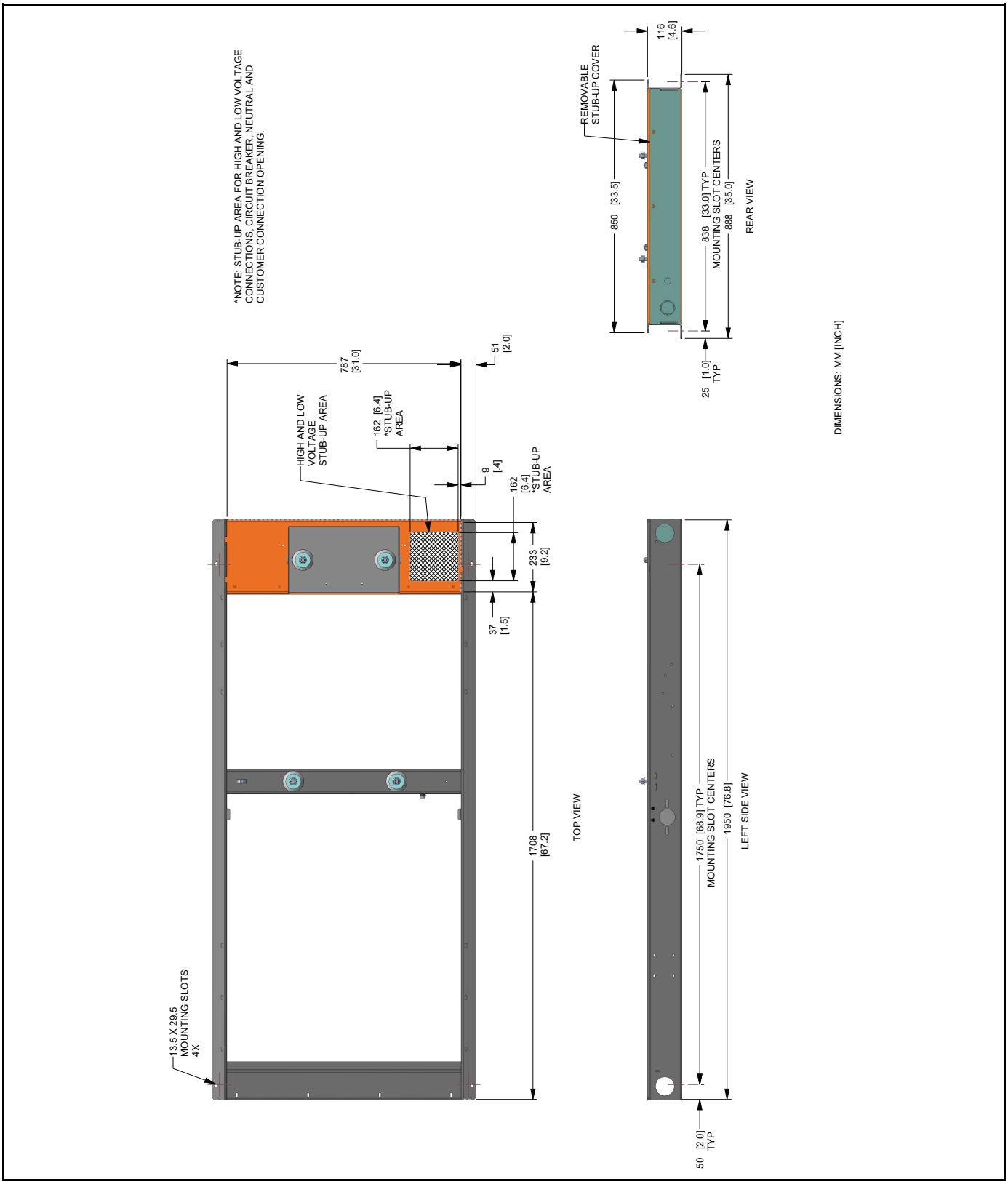

©2025 Generac Power Systems, Inc. All rights reserved. All specifications are subject to change without notice.

Part No. A0005999721
Rev. B 04/10/2025